Challenges in Digital Filter Bank Implementation from a Cognitive Radio Perspective - A Review

Smitha K.G, R. Mahesh and A. P. Vinod
Nanyang Technological University, Singapore
E-mail: {smitha, rpmahesh, asvinod}@ntu.edu.sg.

Abstract— **The need for efficient usage of the scarce electromagnetic spectrum has resulted in the growth of cognitive radios (CRs). The primary task in any CR network is to dynamically sense the radio spectrum so as to reliably determine portion(s) of the frequency band that may be used for communication link(s). Recently spectrum sensing for CRs based on filter banks have been suggested in literature. It was suggested that using filter banks for spectrum sensing will enable multi-carrier communications at no extra cost. This paper presents a study of the requirements and challenges of digital filter banks from a CR perspective in contrast to traditional filter banks for wireless communications. The current state-of-the-art filter banks are discussed, with both advantageous and disadvantageous and how such filter banks can be altered to meet the essential requirements of CR systems.**

I. INTRODUCTION

The demand for ubiquitous wireless services and the need for higher data rates is increasing as a result of the transition from voice-only communications to multimedia type applications. As a result, vast majority of the available spectral resources have already been licensed. It thus appears that there is little or no room to add any new services. On the other hand, studies have shown that most of the licensed spectrum is largely underutilized [1], and similar views about the underutilization of the allocated spectrum have been reported by the Spectrum Policy Task Force appointed by Federal Communications Commission (FCC) [2]. Given the limitations of the natural frequency spectrum, it becomes obvious that the current static frequency allocation schemes cannot accommodate the requirements of an increasing number of higher data rate devices. As a result of the traditional approach of static spectrum allocation, radio spectrum has become one of the scarcest and valuable resources for wireless communications. New insights have recently challenged the traditional approach of static allocation for spectrum management. The most promising way to significantly improve spectral efficiency is to give opportunistic access of the frequency bands to a group of users for whom the band has not been licensed. This is the basic idea behind cognitive radio (CR) where secondary users (called unlicensed or CR users) are allowed to transmit and receive data over portions of spectra which are not utilized by primary (i.e., licensed) users, based on an opportunistic manner [3]. The key functionalities of a CR are to sense the spectral environment over a wide frequency band and exploit the spectrum occupancy information to opportunistically provide wireless links that best meet the user communications requirements [4, 5]. In a CR terminal, these key functionalities must be realized with dynamic reconfigurability to adapt to time-varying spectral environment and low power consumption to work on battery operated mobile devices.

Spectrum sensing detects the unused spectrum segments in a targeted spectrum pool and are used optimally for CR users without harmful interference to the licensed (primary) user. Conventionally there are four techniques which are used for spectrum sensing: matched filtering [6], energy detection, waveform based sensing [8] and cyclostationary feature detection [7]. The optimal way for any signal detection is matched filtering [6], since it maximizes received signal-to-noise ratio. However, a matched filter effectively requires demodulation of the user signal. Since the CR signal is time-varying and the awaited signal may be totally unknown to the detector, matched filtering is not a good solution. Another drawback of matched filter is that a CR would need a dedicated receiver for every primary user [7], which will have an undesirable effect on the hardware complexity. Cyclostationary feature detection method considers the input signal as a cyclostationary process which has spectral correlation due to redundancy caused by periodicity [12]. The cyclostationarity of a signal is reflected in the spectral correlation density (SCD) function which is obtained by taking the Fourier transform of the cyclic autocorrelation function. Therefore, spectral correlation analysis of the received data can be used to identify the signal. Although the cyclostationary model will provide better detection accuracies than a stationary model, the computation of spectral correlation function in this model is a very complex task. The waveform based sensing [13] uses a known pattern and sensing can be performed by correlating the received signal with a known copy of itself. The known pattern can be preambles, midambles, regularly transmitted pilot patterns, spreading sequences etc. The main drawback of this method is that it is only applicable to systems with known signal patterns, and it is termed as coherent sensing. The energy detector [8, 9] measures energy in each narrowband channel and determines the presence of a primary user if the energy detected in a narrowband channel is higher than a certain threshold. Energy detection is the most widely used method as it requires no priori knowledge of the input signal [8]. Many methods based on energy detection like periodogram method, multitaper method and filter bank (FB) method have been investigated in the literature [14]. The widely used

Proceedings of the Second APSIPA Annual Summit and Conference, pages 322–329,
Biopolis, Singapore, 14-17 December 2010.

periodograms and related algorithms can be viewed as filter bank spectral sensors with relatively simple prototype filters. In [14] it is shown that the Thomson's multitaper (TMT) method can also be regarded as a combination of filter banks. Thus one of the integral signal processing components in multi-standard CR systems is the filter banks. The dual usage of filter banks for spectrum sensing and demodulation purposes make them very attractive for CRs. It has been shown in [14] that the discrete Fourier transform filter bank (DFTFB) outperforms conventional TMT in terms of accuracy over the low level power spectral density (PSD) portions of the band. A computationally efficient signal processing scheme which employs an optimal prolate sequence window as a prototype filter in a polyphase DFTFB is presented in [15]. The DFTFB approach in [15] offers improved sensing accuracy than the conventional periodogram method with reduced complexity.

Real-time spectrum sensing of wideband signals whose radio channels (frequency bands) have distinct bandwidths corresponding to different wireless communication standards is an often requirement in CR communications. In addition, fast and accurate spectrum sensing is essential in CR to identify and extract the multiple bandwidth channels present in the wideband input signal. In order to support dynamically allocated wireless communication signals of different channel bandwidths, the spectrum sensor should be able to vary its sensing resolution in real-time. Real-time spectral estimation of wideband signal with low complexity is a challenging task due to the high sampling rate and large bandwidth of the signal. The work till date in spectrum sensing focused mainly on improving estimation accuracy by suitably designed architectures. In this paper, existing filter bank based spectrum sensing techniques are reviewed and the essential modifications to these filter banks are discussed to improve the performance.

The rest of the paper is organized as follows. In Section II, the existing filter bank approaches are presented. Section III presents the advancements to the existing filter banks so at to make them appropriate for CR systems. In Section IV, the simulation results are presented. Section V presents the conclusions.

II. Review of Filter Bank based Spectrum Sensing techniques

Discrete Fourier transform filter bank (DFTFB) based energy detector is found to be more promising than TMT in terms of accuracy over the low level PSD portions of the band [14]. The DFTFB approach in [15], which uses an optimal prolate sequence window as a prototype filter, offers improved sensing accuracy than the periodogram method with reduced complexity. This has an advantage over conventional frequency domain spectrum sensing approaches since (a) FFT is computed at a reduced sampling rate (b) less spectral leakage results in better sensing performance. For detection, simple power detection scheme is used based on the PSD of primary user signal and noise statistics in every subband. Unlike existing power detection schemes, this configuration can detect multiple active channels at the same time. This will, in turn, enable the CR to quickly select the best available (vacant) channel. The basic architecture of the DFTFB based spectrum sensor is as shown in Fig. 1. The conventional N-channel DFTFB consists of a prototype lowpass filter with a normalized passband width of $1/N$, in the polyphase decomposed form, followed by an N-point inverse DFT (IDFT). For reduced computational complexity, fast Fourier transforms (FFTs) are widely used instead of DFT/IDFT. The basic principle of DFTFB is that the N-point IDFT will modulate the lowpass filter response to $2\pi k/N$ locations to form N channels, where k ranges from 0 to $N-1$. Since DFTFB is a modulated FB, all the N channels have equal bandwidths of $2/N$. This means that the conventional DFTFB can extract only multiple channels of single bandwidth. If another bandwidth is required as in the case of a variable resolution spectrum sensing scheme, the prototype filter needs to be redesigned, which is an expensive task. Thus the main drawback of all the DFTFB based spectrum sensor is that the resolution is fixed with the lowest bandwidth available.

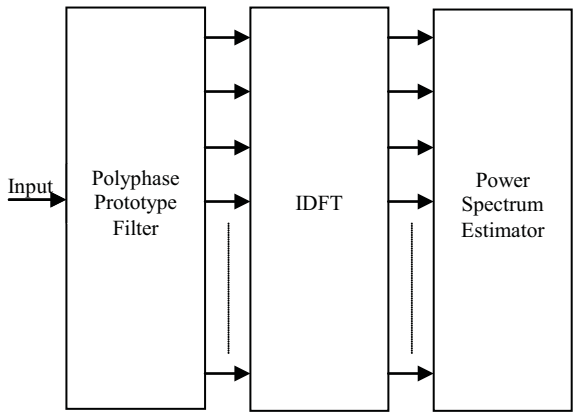

Figure 1. Architecture of the DFTFB based spectrum sensor.

Ideally, depending on channel occupancy rates, sensing algorithm should be evoked at different periods for different frequency segments. Thus, the spectrum sensing architecture is required to dynamically reconfigure its sensing resolution. This means the prototype filter bandwidth should be varied so that the filter bank can extract channels as follows: during the time interval t_0 to t_1, the filter bank should extract N_1 channels (each channel of bandwidth W_1) and during the next time interval t_1 to t_2, the same filter bank should extract N_2 channels (each channel of bandwidth W_2) and so on. The multi-resolution spectrum sensing (MRSS) approach aims to solve this by applying various windows [16-18]. They senses the total bandwidth initially using a coarse resolution. Fine resolution sensing is done only on portion of interesting bands. This approach saves sensing time and power when compared to the scheme which senses the whole bandwidth with highest resolution. The MRSS schemes in [16-18] are analog sensing techniques, which does not conform to the targeted digital platform, software defined radio (SDR), on which CR will be implemented. In a CR, the spectral occupancy as well as the

bandwidths of channels could vary simultaneously. Hence the identical analysis resolution (sensing resolution) at a given time used in the existing approaches is insufficient for signals with time-varying channel occupancy. Moreover the complexity of the multi-resolution schemes in [16-18] is high due to the two-stage approach. Multiple sensing resolutions can be achieved in the digital domain using modulated perfect reconstruction filter banks (MPRB) [19]. This is done using analysis and synthesis filter banks. Both the analysis and synthesis sections require separate prototype filters and DFT operations, which increases its complexity to twice that of DFTFB. Cosine modulated filter banks (CMFB) [20] is also a potential candidate for multiple resolution scheme as they can combine subbands by sign change and spectral addition operations after the discrete cosine transform (DCT) operation whereas MPRB needs separate synthesis filters to do the same. But it can be noted that the DCT operation needs S^2 multiplications (where S is the order of the DCT matrix) when compared to the $S \log_2 S$ multiplications for S-point FFT needed to extract S channels in DFTFBs. Spectral addition to achieve multiple resolution will further increase the complexity of CMFB. In the next section, we present two types of filter banks, which can be used for efficient MRSS in CR systems.

III. Filter Banks for MRSS

The flexibility in realizing multi-resolution spectrum sensor is achieved by suitably designing the prototype filter and efficiently selecting the desired sensing resolution without hardware re-implementation. It overcomes the fixed sensing resolution limitation of spectrum sensors based on conventional DFTFB used in energy detection. In this section, two such FBs are presented, 1) a FB based on fast filter bank (FFB) concept in [22] and 2) a modification of the DFTFB, where the prototype filter is implemented using the concept of coefficient decimation [24]. The former FB results in low static power implementations and the latter results in low dynamic power implementations.

A. Fast Filter Bank based MRSS scheme

In this section, a novel MRSS scheme based on low complexity FFBs [22] is presented. The FFB approach works on frequency response masking (FRM) [21] principle. The FFB follows a tree structure and it can be decomposed into several stages. For a k-stage FFB, we can realize 2^k channels. Fig. 2 shows the structure of a 16 channel FFB, for $k = 4$. The input is denoted as $x(n)$, and the output channels are denoted by numerals 0-15. The subfilters in the FFB denoted as $H_{i,j}(Z)$, where $H_{i,0}(Z)$, 'i' varied from 0 to $k = 4$, are the prototype filters. The prototype filters are four odd length symmetrical impulse response lowpass filters. The subfilters $H_{i,j}(Z)$ where j>0 are modulated versions of prototype filter and together they form the basic structure of FFB [22] as shown in Fig. 2. Each stage is interpolated by a factor M and we can get both the original and complementary responses from each stage.

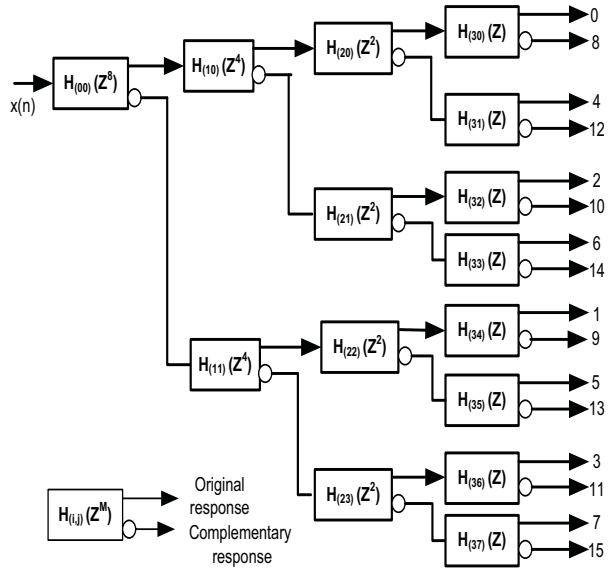

Figure 2. Architecture of a 16 channel FFB.

The output response of the FFB depends on the interpolated modal filter response. If the interpolation factors of the modal filter can be changed with the corresponding masking filter stages of FFB, a filter bank with channels of different bandwidths can be realized. These multiple bandwidth filter banks can perform multi-resolution spectrum sensing for CR receivers.

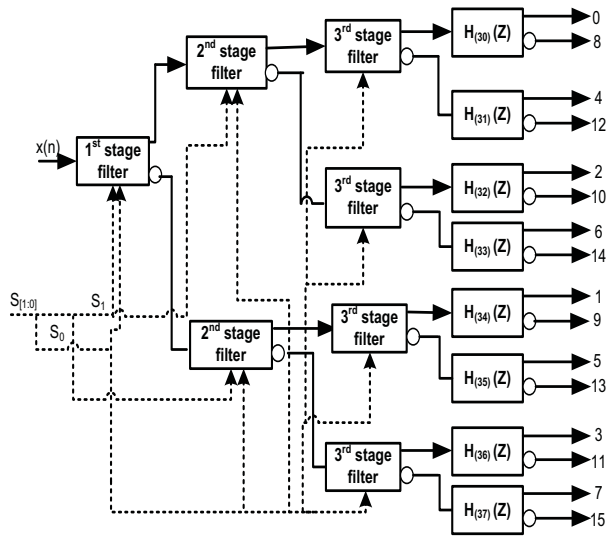

Figure 3. MRFFB architecture.

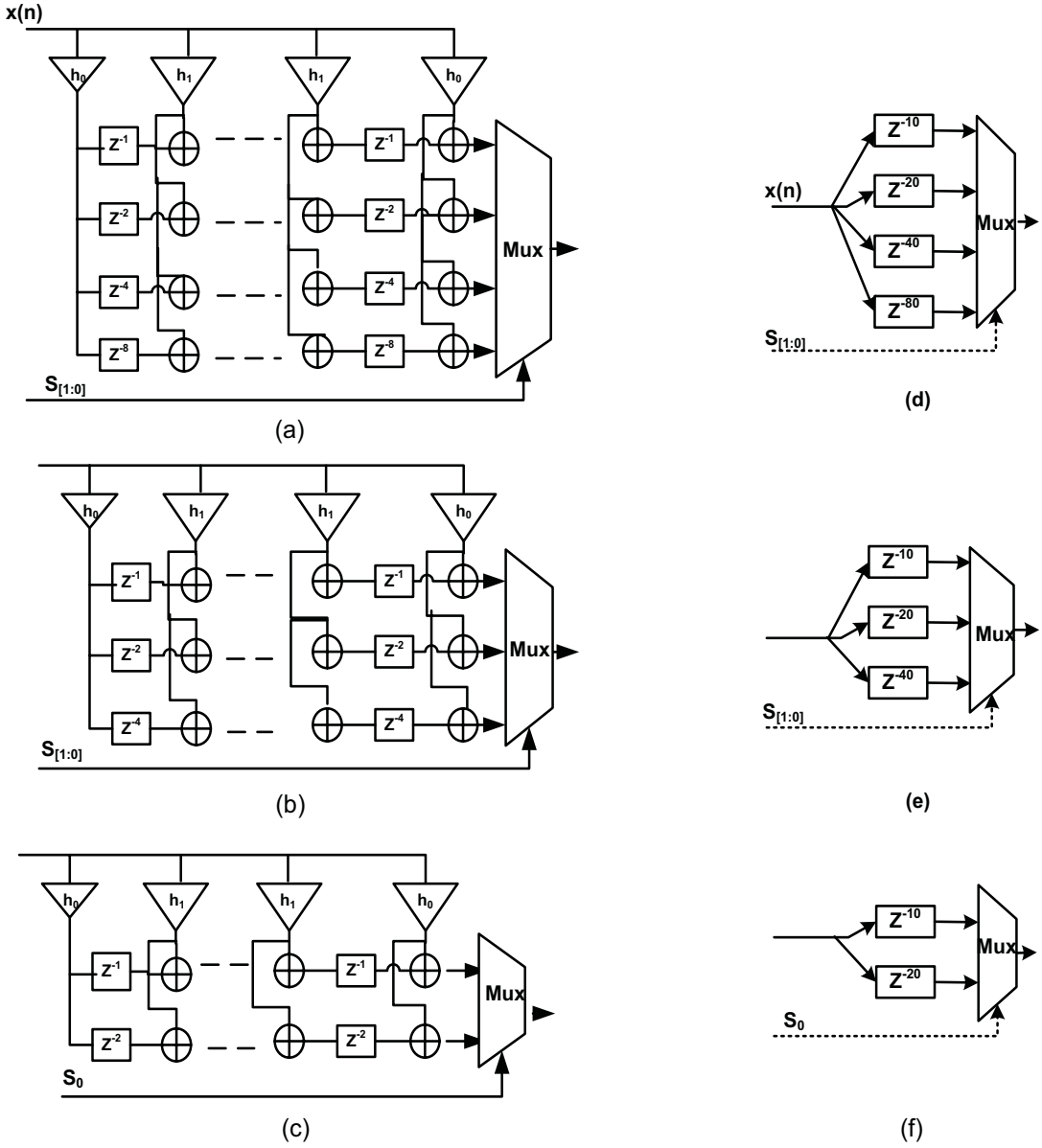

Figure 4. Reconfigurable filter architectures for 1st, 2nd and 3rd stage filters. (a) 1st stage output, (b) 2nd stage output, (c) 3rd stage output, (d) Complementary delays for the 1st stage, (e) Complementary delays for the 2nd stage, (f) Complementary delays for the 3rd stage

The architecture for the multi resolution fast filter bank (MRFFB) [25] is shown in Fig. 3. The reconfigurability is achieved by using the select line $S_{[1:0]}$. Each stage filter has an output multiplexer controlled by the select line $S_{[1:0]}$. Fig. 3 shows the MRFFB architecture and Fig. 4 (a), 4 (b) and 4 (c) show the reconfigurable individual filter architectures for the first three stages respectively. The complementary delays for the subfilter architecture of the three stages are also shown as Fig. 4 (d), 4 (e) and 4 (f) respectively. The value of *M* for each stage can be varied so as to obtain a different bandwidth output. Using the select lines $S_{[1:0]}$ shown in Fig. 3 and Fig. 4, the FFB architecture can be reconfigured for obtaining variable bandwidth output. For example, if the modal filter or the first stage filter has the passband and stopband specifications as 0.4 and 0.6 normalized value respectively, then the minimum resolution that can be sensed is 0.1 for a 16-channel MRFFB. When the value of select signal, $S_{[1:0]}$ is "11", we obtain 16 channels, each of bandwidth (*BW)*, 0.1. It can be noted that only half of the channels can be seen within the given input bandwidth range. Hence using a 16 channel-FFB, we can only obtain 8 channels. Similarly when $S_{[1:0]}$ is "10", we obtain 4 channels of BW, 0.2; when $S_{[1:0]}$ is "01",we obtain 2 channels of BW, 0.4. Thus using the MRFFB architecture, the bandwidth resolution of the channel can be

varied. For a given wideband spectrum of CR, with known spectral occupancy, we can set the select signal to the required value. This will enable us to sense the spectrum at the optimal way rather than summing channels with lowest bandwidth resolution as in conventional fixed sensing methods.

B. Coefficient Decimation based MRSS scheme

In the coefficient decimation based DFTFB (CD-DFTFB), the prototype filter is implemented using the coefficient decimation (CD) approach by us in [24]. Using the CD approach, different passband widths are possible for the prototype filter with minimum hardware over head. Thus the same DFTFB can be reconfigured easily for extraction of channels of different bandwidths. The basic idea of CD approach [24] is as follows. If every M^h coefficient of a finite impulse response (FIR) filter *h(n)* (called modal filter) is kept unchanged and all other coefficients are replaced by zeros, we get $h'(n)$, that has a multi-band frequency response:

$$h'(n) = h(n).c_M(n) \quad (1)$$

$$\text{where } c_M(n) = \begin{cases} 1; \; for\; n = kM, & k = 0,1,2...M-1 \\ 0; otherwise \end{cases}$$

The frequency response of $h'(n)$ is scaled by *M* with respect to that of *h(n)* and the replicas of the frequency spectrum are introduced at integer multiples of $2\pi/M$. By changing the value of *M*, different numbers of frequency response replicas located at different centre frequencies can be obtained. In the sequel, we call this coefficient decimation (CD) method as *CDM-1*. The passbands of the multi-band response obtained using *CDM-1* will have identical widths as that of the modal filter [24]. If all the coefficients of the coefficient decimated filter obtained using *CDM-1* are grouped together after discarding the in-between zeros, a decimated version of the original frequency response is obtained whose passband width is *M* times that of the original modal filter. This method is referred as *CDM-2* in the sequel. In this paper, we are using *CDM-2* for obtaining different passband widths for the prototype filter. This can be illustrated through the implementation of a four-channel DFTFB as follows: For a four-channel DFTFB, an *L*-tap prototype lowpass filter with passband width of 1/4=0.25 and coefficients $h=\{h_0,h_1,h_2,h_3,h_4 \ldots h_{L-1}\}$ is designed. The implementation of prototype filter consists of four polyphase branches: $H_0=\{h_0,h_4,h_8,\ldots\}$, $H_1=\{h_1,h_5,h_9,\ldots\}$, $H_2=\{h_2, h_6, h_{10}, \ldots\}$ and $H_3=\{h_3,h_7,h_{11},\ldots\}$. The outputs of these four polyphase branches are given as the input to the four-point IDFT to form the four-channel DFTFB. The channels at the output of the four-channel DFTFB will have a normalized passband width of 0.5. Now consider the coefficient decimation (*CDM-2*) by 2 (i. e. *M=2*). The new set of coefficients are $h^1=\{h_0,h_2,h_4, h_6 \ldots\}$. Since some coefficients are discarded, the four polyphase branches become: $H^1_0=\{h_0, h_8, h_{16}\ldots\}$, $H^1_1=\{h_2,h_{10},h_{18}\ldots\}$, $H^1_2=\{h_4,h_{12},h_{20}\ldots\}$ and $H^1_3=\{h_6,h_{14},h_{22}\}$. Again, the outputs of these four polyphase branches are given as the input to the four-point IDFT to form the four-channel DFTFB. However in this case, the channels at the output of the four-channel DFTFB will have a normalized passband width of 1. If the coefficients before and after coefficient decimation (*CDM-2*) are carefully examined, it can be seen that the same set of coefficients can be employed for the prototype filter implementation with some changes in arrangement of the structural adders.

In the conventional DFTFB, the prototype filter is implemented in the polyphase direct form structure. This will help to move the downsampling to be done before filtering. As a result of this, the prototype filter can operate at a lower sampling frequency and thus the number of multiplications in the prototype filter per sampling rate can be reduced. Consequently the dynamic power consumption will be reduced. Even in the CD-DFTFB, the prototype filter based on *CDM-2* can be implemented using the direct form. The architecture for the four-channel DFTFB with a resolution of two (i. e., the prototype filter can operate in two bandwidths) as discussed in the previous section with prototype filter implemented in direct form is shown in Fig. 5. The multiplexers Mux_H_0 to Mux_H_3 and Mux_X will select the prototype filter architecture to obtain variable resolution for the CD-DFTFB [26]. The red lines in Fig. 3 represent the additional arrangement required to perform *CDM-2* in the CD-DFTFB [26]. In Fig. 5, the two cases discussed above (the implementation of filter without *CDM-2* and with *CDM-2* for *M=2*) are shown. The black lines show the implementation of the prototype filter without *CDM-2*, i. e., the implementation of $H_0=\{h_0,h_4,h_8,\ldots\}$, $H_1=\{h_1,h_5,h_9,\ldots\}$, $H_2=\{h_2, h_6, h_{10}, \ldots\}$ and $H_3=\{h_3,h_7,h_{11},\ldots\}$. The red lines show the implementation of the additional structural adders required for implementing the prototype filter with *CDM-2* for the case *M=2*, i. e. the implementation of $H^1_0=\{h_0, h_8, h_{16}\ldots\}$, $H^1_1=\{h_2,h_{10},h_{18}\ldots\}$, $H^1_2=\{h_4,h_{12},h_{20}\ldots\}$ and $H^1_3=\{h_6,h_{14},h_{22}\}$. In Fig. 5, only two possibilities are shown and hence only a 2:1 multiplexer is required, however the CD-DFTFB can be generalized to operate for the case without *CDM-2* and the cases with *CDM*-2 for different values of *M* (i.e., *M=1,2,3* etc till $Mf_s<0.5$, where f_s is the normalized stopband edge of the prototype filter [24]). In this particular example, a four-channel CD-DFTFB is shown; however the approach can be generalized to an *N*-channel DFTFB. In that case, a prototype lowpass filter with a passband width of *1/N* is designed and using coefficient decimation, channels of passband widths of *i/N* can be obtained, where *i*=2,3, etc.

C. Comparison of MRFFB and CD approaches

In this section, two types of FBs are presented and the usefulness of the FBs towards MRSS approach are shown. The FFB based approach, MRFFB, is based on the concept of FRM [21], which is inherently less complex and results in area efficient implementations. Thus the static power associated with the MRFFB scheme will be much less. However, all the subfilters associated with the MRFFB based scheme need to operate at a very high sampling rate, sampling frequency to be exact. As a result of this the dynamic power consumption of the MRFFB based scheme is on the higher side. If we consider, the CD-DFTFB scheme, the downsampling factor can be done before filtering because of

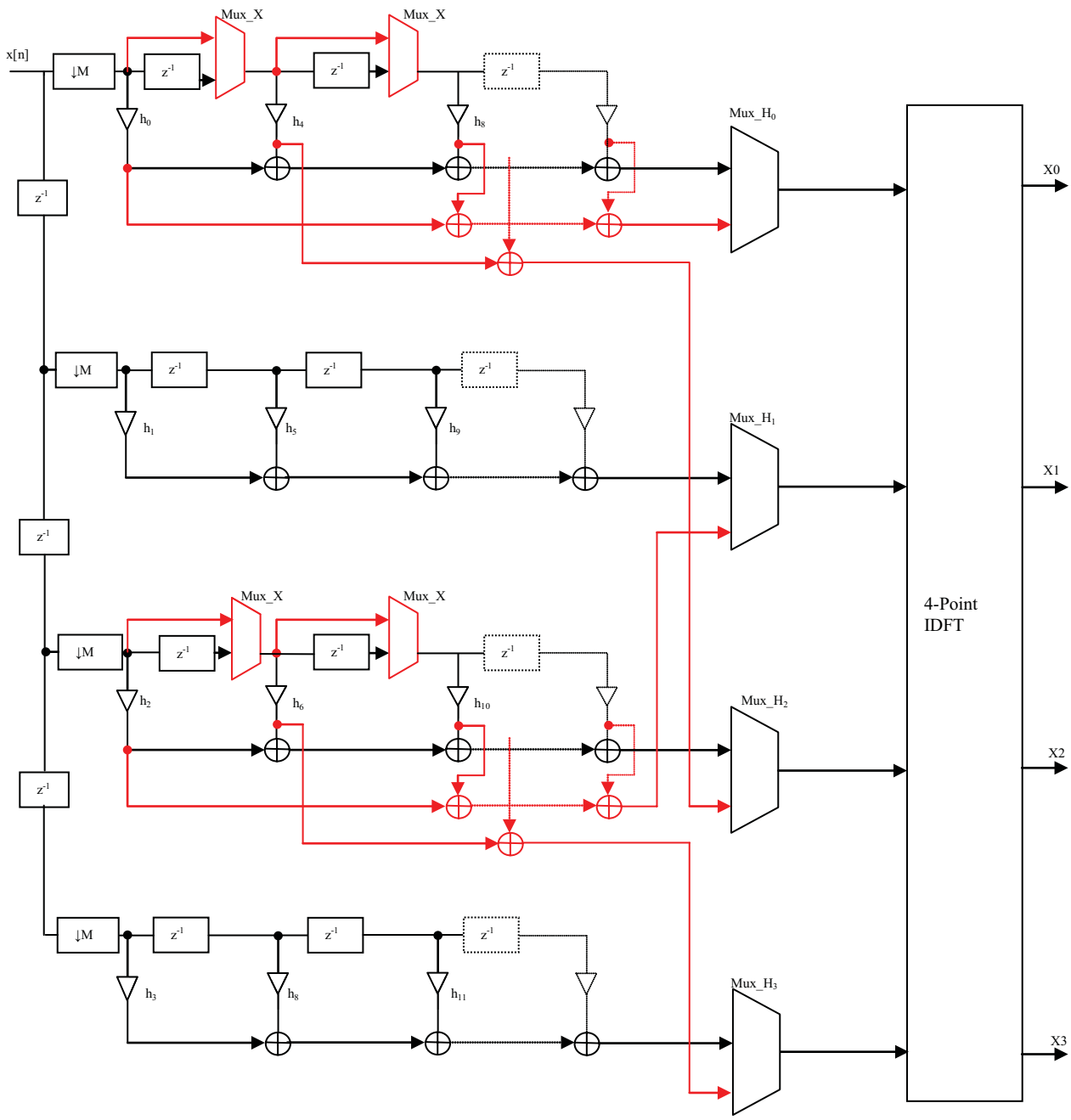

Figure 5. Architecture of the CD-DFTFB in direct form.

polyphase decomposition. As a result of this, the filters need to operate at a lower sampling rate. Hence the dynamic power consumption will be low for CD-DFTFB based MRSS scheme. But since prototype filter of the CD-DFTFB is of high order, the area complexity is higher than MRFFB based scheme and hence results in increased static power consumption. Thus to conclude, the MRFFB based scheme is ideal for low area requirements and CD-DFTFB based scheme is ideal for low dynamic power requirements.

IV. Simulation Results

In this section, we present the simulation results to demonstrate the performance of the MRFFB based and CD-DFTFB based MRSS scheme. The performance of the of these method can be evaluated using two probabilities: P_d, probability of detection and P_{fa}, probability of false alarm. P_d is the probability of detecting a signal on the considered frequency or frequency band, when it was truly sent and P_{fa} is the probability that the detection incorrectly decides the

presence of a signal when there was no signal sent in that frequency band.

The decision in the presence of a signal can be made by comparing the signal energy against a threshold value. The performance characteristics plot is obtained by varying the threshold and obtaining the P_d and P_{fa} by doing 15000 simulations on detecting the signal. This was achieved by sending a sinusoidal signal at a specific frequency with zero mean Gaussian noise. The MRFFB and CD-DFTFB based energy detector in the design example is taken for comparison with the conventional DFTFB. All the systems are made to detect the same signal in the presence of noise. It can be noted that the performance of CD-DFTFB is equivalent to DFTFB as both are having the same coefficients. CD-DFTFB only adds flexibility into the DFTFB architecture and hence their performance graphs are the same. The values of P_d and P_{fa} are calculated and plotted for two different values of Signal to Noise power ratio (SNR), -15 dB and -20 dB, in Fig. 6.

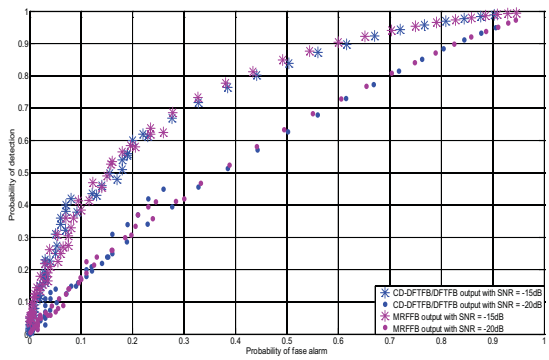

Figure 6. Plot of Pd Vs Pfa for multiple signal to noise ratio.

The performance evaluation test result shown in Fig. 6 indicates that the MRFFB and CD-DFTFB based spectrum sensor performs as good as DFTFB based spectrum sensors. For fair comparison we had taken fixed bandwidth subband sensing for both the methods.

V. CONCLUSIONS

Fast and accurate spectrum sensing is one of the key functionalities in a cognitive radio (CR). The discrete Fourier transform filter banks (DFTFBs) employed in conventional energy detection based spectrum sensing provides only fixed sensing resolution as it splits the wideband input signal into uniform bandwidth channels (frequency bands). In this paper, two spectrum sensing schemes based on coefficient decimation based DFTFB and MRFFB are presented, which can be reconfigured to obtain different uniform bandwidth channels at different instances and thus enables multi-resolution spectrum sensing. It has been shown that, the former approach results in low dynamic power implementations where as the latter results in low static power implementations.

REFERENCES

[1] S. M. Mishra, D. Cabric, C. Chang, D. Willkomm, B. V. Schewick, A. Wolisz, R. W. Brodersen, "A real time cognitive radio testbed for physical and link layer experiments", *Proceedings of the 2005 IEEE International Symposium on Dynamic Spectrum Access Networks*, pp. 562-56, 2005.

[2] Federal Communications Commission, Spectrum Policy Task Force, Rep. ET Docket no. 02-135, November 2002.

[3] J. Mitola, and G. Q. Maguire Jr., "Cognitive radios: Making software radios more personal", *IEEE Personal Communication* vol. 6, no. 4, pp. 13-18, August 1999.

[4] Federal Communications Commission, ET Docket No. 03-322. Notice of Proposed Rule Making and Order, December 2003.

[5] S. Haykin, "Cognitive radio: brain-empowered wireless communications", *IEEE Journal Selected Areas in Communications,* vol. 23, no. 2, pp. 201-220, February 2005 .

[6] N. Sai Shankar, C. Cordeiro and K. Challapali, "Spectrum agile radios: utilization and sensing architectures," in *First IEEE International Symposium on New Frontiers in Dynamic Spectrum Access Networks, 2005*, DySPAN 2005, pp. 160 - 169 8-11 Nov. 2005.

[7] D. Cabric, S. M. Mishra and R. W. Broderson, "Implementation issues in spectrum sensing for cognitive radios," *Proc. 38th Asilomar Conference on Signals, Systems and Computers,* pp. 772-776, vol. 1, Pacific Grove, California, USA, November 2004.

[8] T. Ycek and H. Arslan, **"**A survey of spectrum sensing algorithms for cognitive radio applications**,"** *IEEE Communications Surveys & Tutorials*, vol. 11, no. 1, 2009.

[9] H. Urkowitz, "Energy detection of unknown deterministic signals," *Proceeding of the IEEE,* pp.4523–531, vol. 55*,* no. 4, April 1967.

[10] Y. Zeng, Y-C Liang, A. T. Hoang, and R. Zhang," A review on spectrum sensing for cognitive radio: challenges and solutions," *EURASIP Journal on Advances in Signal Processing*, Article ID 381465, doi:10.1155/2010/381465, 2010.

[11] K. V. Cai, V. Phan and R.J. O'Connor, "Energy detector performance in a noise fluctuating channel", *Proc. IEEE Military Communications Conference,* pp. 85–89, vol. 1, October 1989.

[12] M. Ghozzi, F. Marx, M. Dohler, and J. Palicot, "Cyclostationarilty-based test for detection of vacant frequency bands," *Proc. IEEE Int. Conf. Cognitive Radio Oriented Wireless Networks and Commun. (Crowncom)*, Mykonos, Greece, pp. 1-5, Jun. 2006.

[13] A. Sahai, R. Tandra, S. M. Mishra, and N. Hoven, "Fundamental design tradeoffs in cognitive radio systems," *Proc. of Int. Workshop on Technology and Policy for Accessing Spectrum*, Aug. 2006.

[14] Behrouz Farhang-Boroujeny, "Filter bank spectrum sensing for cognitive radios", *IEEE Trans. on Signal Processing,* vol. 56, no. 5, pp. 1801-1811, May 2008.

[15] Faheem Sheikh & Benny Bing, "Cognitive spectrum sensing and detection using polyphase DFT filter banks," *in Proc. IEEE Consumer Communications and Networking Conference (CCNC)*, pp. 973-977, Las Vegas, NV, Jan. 2008.

[16] Y. Hur, 1. Park, W. Woo, K. Lim, C.-H. Lee, H.S. Kim, and 1. Laskar, "A wideband analog multi-resolution spectrum sensing (MRSS) technique for cognitive radio (CR) systems," *International Symposium on Circuits and Systems (ISCAS),* pp. 4090-4093*,* May 2006.

[17] Nathan M. Neihart, Sumit Roy, and David, "A parallel, multi-resolution sensing technique for multiple antenna cognitive

radios," *International Symposium on Circuits and Systems (ISCAS),* pp. 2530-2533, May, 2007.

[18] Qiwei Zhang , Kokkeler, A.B.J., Smit, G.J.M., "An efficient multi-resolution spectrum sensing method for cognitive radio," *3rd International Conference on Communications and networking in China (ChinaCOM),* pp. 1226-1229, Aug. 2008.

[19] W. A. Abu-Al-Saud and G. L. Stuber, "Efficient wideband channelizer for software radio systems using modulated PR filter banks," *IEEE Trans. Signal Processing*, vol. 52, no. 10, pp.2807-2820. Oct. 2004.

[20] Bing Li; Lindong Ge; Jin Zheng , "An efficient channelizer based on nonuniform filter banks," *8th International Conference on Signal Processing*, vol.3, pp.16-20, 2006.

[21] Y. C. Lim, "Frequency-response masking approach for the synthesis of sharp linear phase digital filters", *IEEE Trans. Circuits. Syst.,* vol.33, pp. 357-364, Apr. 1986.

[22] Y. C. Lim and B. Farhang-Boroujeny, "Fast Filter Bank (FFB),", *IEEE Trans. on Circuits and Systems II*: vol. 39, no. 5, pp. 316-318, May 1992.

[23] Y. C. Lim and B. Farhang-Boroujeny, "Analysis and optimum design of the FFB," *Proc. International Symposium on Circuits and Systems (ISCAS)*, vol. 2, pp. 509-512, May 1994.

[24] R. Mahesh and A. P. Vinod, "Coefficient decimation approach for realizing reconfigurable finite impulse response filters," *Proc. of IEEE International Symposium on Circuits and Systems*, pp.81-84, Seattle, USA, May 2008.

[25] Smitha K. G. and A. P. Vinod, "A multi-resolution digital filter bank for spectrum sensing in military radio receivers," *Proceedings of IEEE International Conference on Signal Processing and Communications,* July 2010, Bangalore, India.

[26] R. Mahesh and A. P. Vinod, "Reconfigurable discrete Fourier transform filter banks for multi-standard channelizers," *Proceedings of IEEE International Conference on Signal Processing and Communications*, July 2010, Bangalore, India.